TestHorse

Certified IT practice exam authority

Accurate study guides, High passing rate!
Testhorse provides update free of charge in one year!

http://www.testhorse.com

Exam : **E20-535**

Title : Networked Storage - NS Implementation

Version : Demo

1.The NAS solution requires that file system fs01 be mounted to /mp1. CIFS users must not see the .etc and lost&found objects when they access the CIFS share.
Which procedure meets this requirement?
A. Mount fs01 to /mp1 Create the directory /mp1/share Export /mp1/share as a CIFS share
B. Mount fs01 to /mp1 Create the directory /mp1/share Unmount fs01 from /mp1 Mount fs01 to /mp1/share Export /mp1/share as a CIFS share
C. Create the mountpoint /mp1/share Mount fs01 to /mp1/share Export /mp1/share as a CIFS share
D. Mount fs01 to /mp1 Export /mp1/ as a CIFS share Mark .etc and lost&found as hidden
Answer: A

2.Click the Exhibit button.

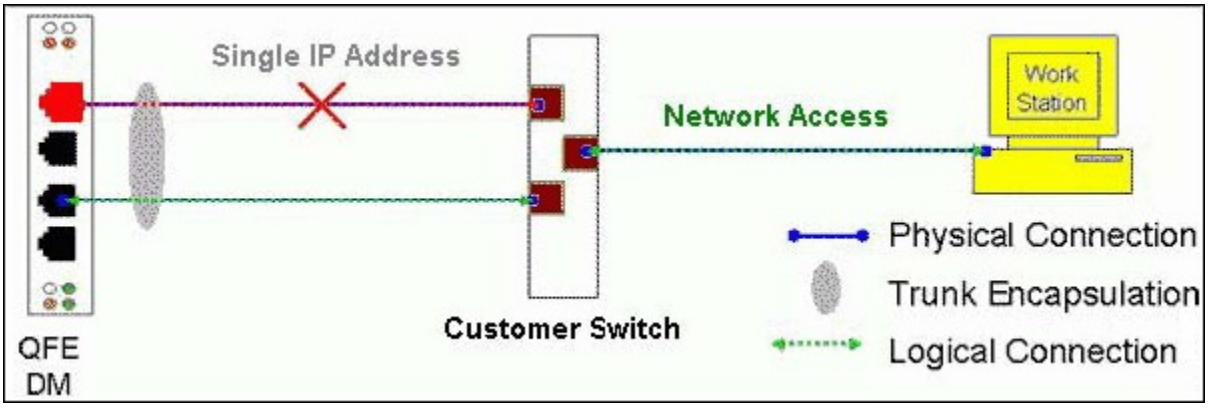

What will happen if one of the trunking network paths fails (indicated by the X)?
A. I/O will wait until the failed path becomes available
B. The Data Mover will failover
C. I/O will pass on both paths
D. All I/O will pass on active path only
Answer: D

3.Which NS600 cache data is written to the vault area in the event of a power failure?
A. Write and read
B. Write
C. Read
D. NVRAM
Answer: B

4.What are two [2] accurate statements about Virtual Data Movers [VDMs]?
A. support NFS only
B. do not support CDMS
C. do not support CPU/memory resource allocation
D. support CIFS and NFS
Answer: B,C

5.When the getreason command is used, which status identifies that a Data Mover needs to be replaced?
A. connected

B. contacted
C. powered off
D. dos booted
Answer: C

6.From where will the data be read when a bitmap value of a data block in a SnapSure checkpoint is 1?
A. cache
B. bitmap
C. PFS
D. SavVol
Answer: D

7.DRAG DROP
Number the statements, in order, about Celerra Replicator's periodic update to the SavVol.

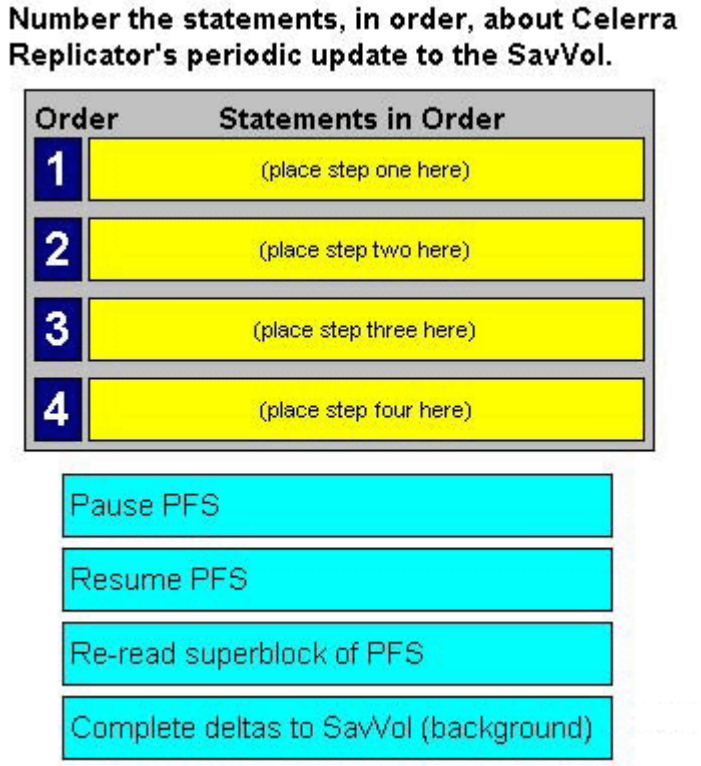

Answer:

Number the statements, in order, about Celerra Replicator's periodic update to the SavVol.

Order	Statements in Order
1	Pause PFS
2	Re-read superblock of PFS
3	Complete deltas to SavVol (background)
4	Resume PFS

Pause PFS

Resume PFS

Re-read superblock of PFS

Complete deltas to SavVol (background)

8.What is the fully functional state of a Virtual Data Mover?
A. loaded
B. TempUnloaded
C. mounted
D. PermUnloaded
Answer: A

9.What is one characteristic of internal usermapper?
A. runs on Control Station
B. requires post DART code installation on the Control Station from the Celerra Application disk
C. coexist with External usermapper is recommended
D. no separate installation required
Answer: D

10.What is the default authentication method used in Windows Active Directory, Native Mode?
A. LM
B. Kerberos
C. NIS
D. NTLM
Answer: B

11.What is one characteristic of SnapSure?
A. can mount a checkpoint on any Data Mover
B. can delete a checkpoint in any order

C. checkpoint is independent of its Production File System
D. checkpoints are stored in the same volume as the Production File System
Answer: B

12.Which NS600 cache data is written to the vault area in the event of a power failure?
A. NVRAM
B. Read
C. Write
D. Write and read
Answer: C

13.Click the Exhibit button.

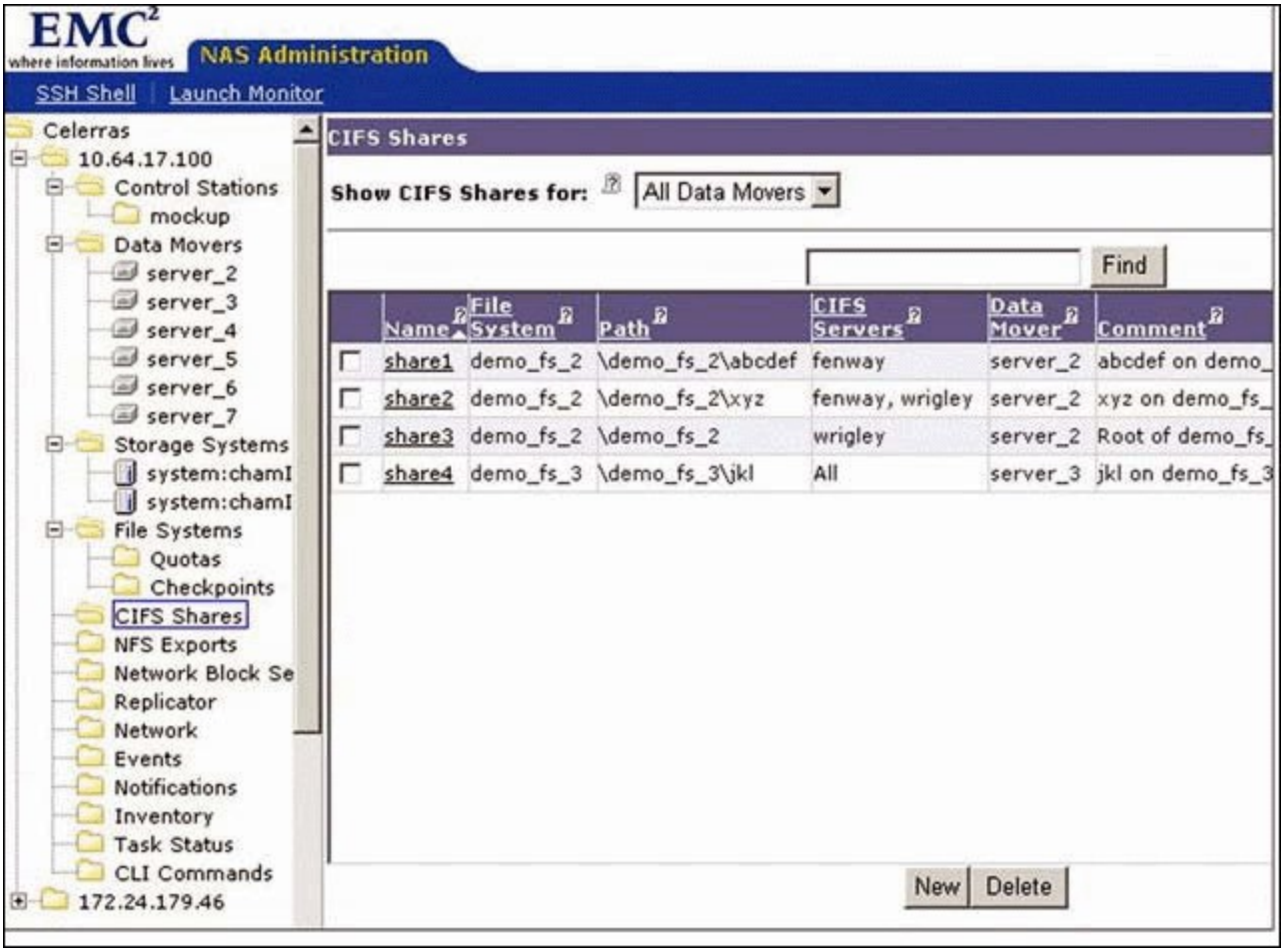

Which three [3] shares are visible on \\fenway?
What is recommended for high availability in a high application transaction environment?
A. NFS
B. FTP
C. TFTP
D. CIFS
Answer: A

15.Which assigns the Fibre Channel WWN?

A. Operating system
B. Hardware manufacturer
C. Name server
D. System Administrator
Answer: B