TestHorse

Certified IT practice exam authority

Accurate study guides, High passing rate!
Testhorse provides update free of charge in one year!

http://www.testhorse.com

Exam : **JN0-648**

Title : Enterprise Routing and Switching, Professional (JNCIP-ENT)

Version : DEMO

1.Exhibit.

```
user@router# show interfaces ge-0/0/1
description "Customer Port";
flexible-vlan-tagging;
native-vlan-id 150;
encapsulation extended-vlan-bridge;
unit 10 {
     vlan-id-list 100-200;
     input-vlan-map push;
     output-vlan-map pop;
}
user@router# show interfaces xe-0/0/48
description "Uplink Port";
vlan-tagging;
unit 10 {
     vlan-id 10;
}

user@router# show vlans v10
interface ge-0/0/1.10;
interface xe-0/0/48.10;
```

Referring to the exhibit, which two statements are true regarding Q-in-Q tunneling? {Choose two)

A. The C-VLAN traffic will be encapsulated with an outer VLAN tag of 10.

B. The C-VLANs 100-200 will be sent as the inner VLAN tag

C. The C-VLAN 150 will be sent as the inner VLAN tag

D. The C-VLAN traffic will be encapsulated with an outer VLAN lag of 150

Answer: A,B

2.Exhibit.

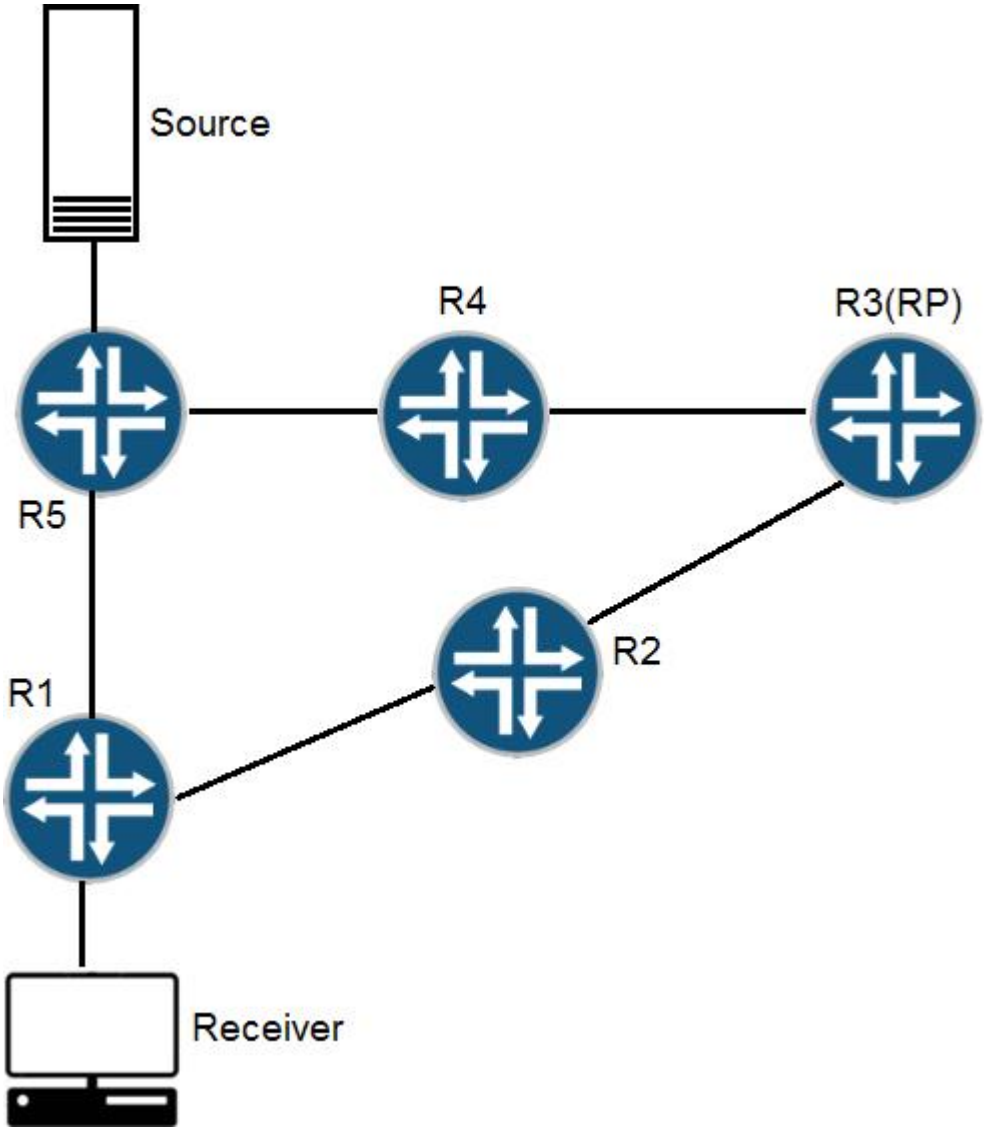

Referring to the exhibit, a RMSM network is set up to enable communication between multicast devices. Which statement is true in this scenario?

A. After the formation of the shortest-path tree, a join message is sent from R2 to R1.

B. After the formation of the shortest-path tree, a join message is sent from R1 to R5

C. After the formation of the shortest-path tree, a prune message is sent from R1 to R2.

D. After the formation of the shortest-path free, a prune message is sent from R1 to R5.

Answer: C

3.In IS-IS advertising POUs with the overload bit has which effect?

A. The local device will no longer be used for transit traffic

B. The local device's POUs are marked with a metric of 65535

C. The ISIS adjacencies become passive

D. The IS-IS adjacencies enter the "new" state

Answer: A

4.What are two supported PoE management modes? (Choose two.)

A. mixed

B. standalone
C. class
D. static
Answer: C,D

5.You have an MX960 configured as a Fusion aggregation device (AD) and two QFX5100 switches as satellite devices (SD). You have configured local-switching for each SD. A packet with an unknown MAC address is received on one of the SD extended ports.
Which statement is correct in this scenario?
A. The packet is dropped and a reject message is sent out to the port where it was received.
B. The packet is silently discarded and a reject message is sent to the AD.
C. The packet is flooded out of all the ports on the SD except the one where it was received.
D. The packet is sent to the AD to be processed and forwarded.
D18912E1457D5D1DDCBD40AB3BF70D5D
Answer: D